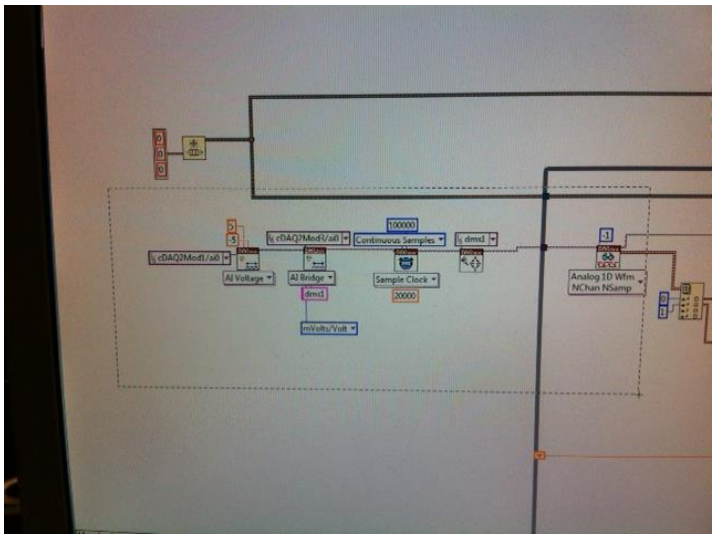
100000
cDAQ2Mod1/ai0
cDAQ2Mod1/ai0
Continuous Samples
dms1
AI Voltage
AI Bridge
Sample Clock
20000
dms1
mVolts/Volt
-1
Analog 1D Wfm
NChan NSamp

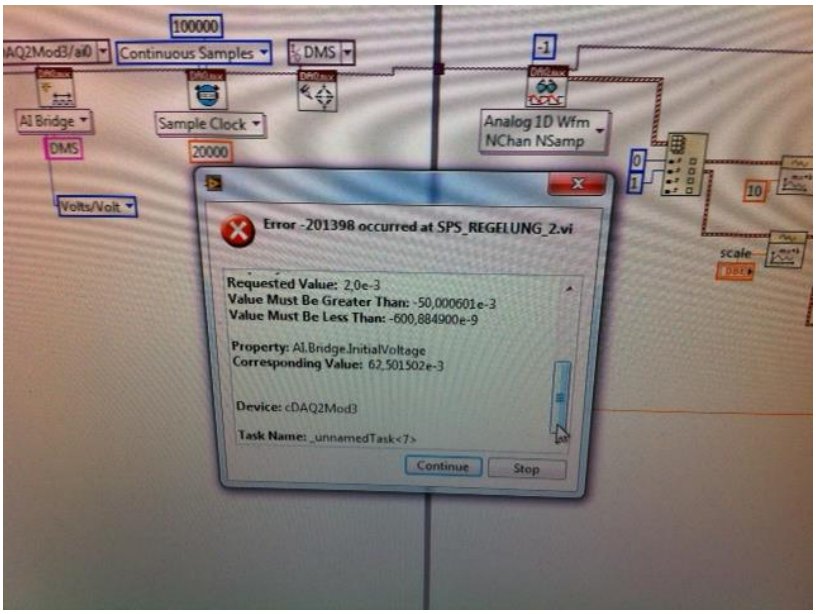
100000
Continuous Samples
DMS
AI Bridge
DMS
Volts/Volt
Sample Clock
20000
-1
Analog 1D Wfm
NChan NSamp
10
scale
Error -201398 occurred at SPS_REGELUNG_2.vi
Requested Value: 2,0e-3
Value Must Be Greater Than: -50,000601e-3
Value Must Be Less Than: -600,884900e-9
Property: AI.Bridge.InitialVoltage
Corresponding Value: 62,501502e-3
Device: cDAQ2Mod3
Task Name: _unnamedTask<7>
Continue
Stop